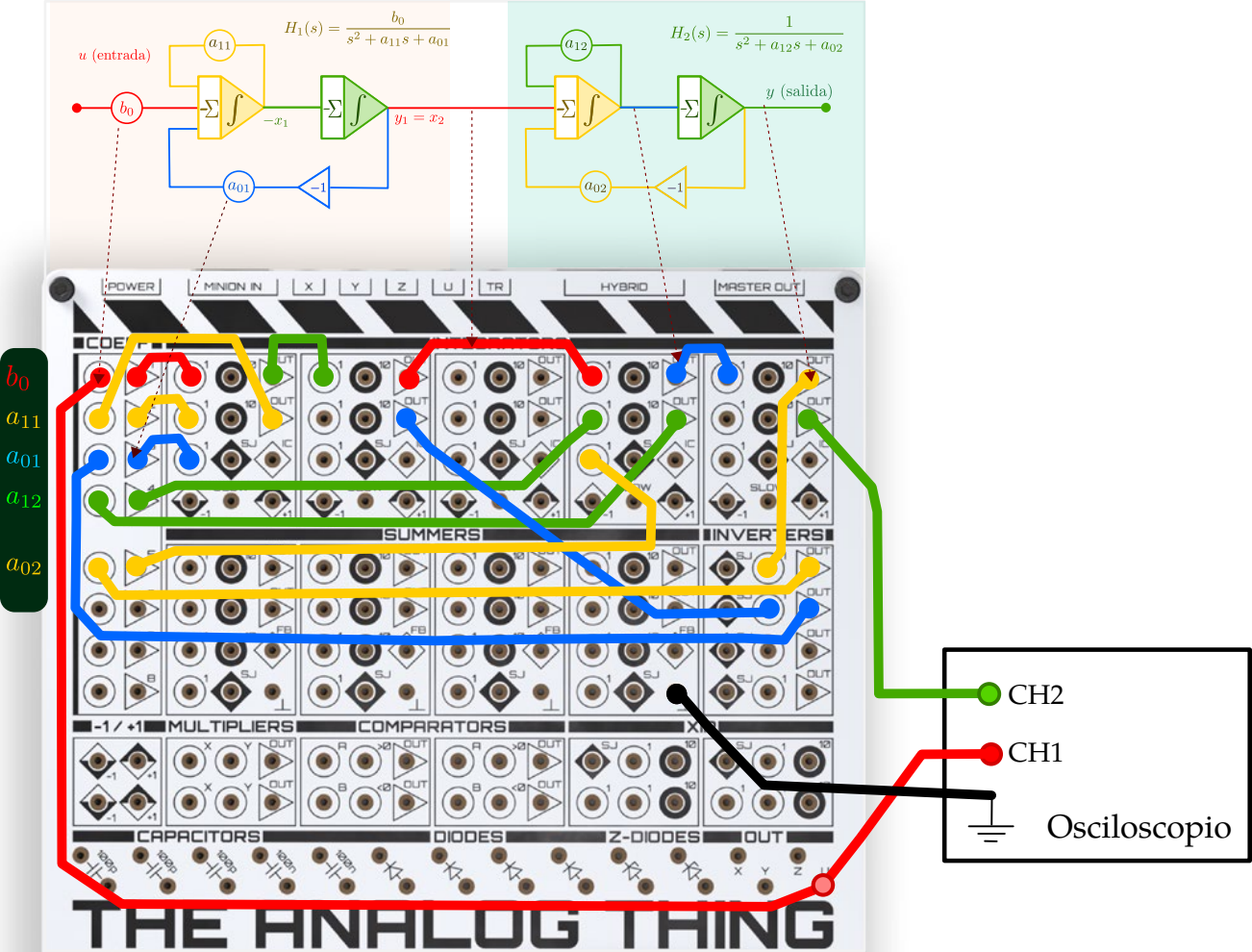
$H_1(s) = \frac{b_0}{s^2 + a_{11}s + a_{01}}$
$H_2(s) = \frac{1}{s^2 + a_{12}s + a_{02}}$
u (entrada)
y (salida)
b_0
a_{11}
a_{01}
a_{12}
a_{02}
$-x_1$
$y_1 = x_2$
-1
POWER
MINION IN
X
Y
Z
U
TR
HYBRID
MASTER OUT
SUMMERS
INVERTERS
-1 / +1
MULTIPLIERS
COMPARATORS
CAPACITORS
DIODES
Z-DIODES
OUT
THE ANALOG THING
CH2
CH1
Osciloscopio